RNMV-EI

INTELLIGENT HIGH VOLTAGE SOLID STATE SOFT STARTER
| CATALOG



5G IIoT Technical Endorsement

Stock code: 833 586

Technical innovation benefits the world

雷诺尔
Shanghai RENLE
Science&Technology Co., Ltd.

Professional Manufacturer for Smart Grid • New Energy • Electric Drive

Shanghai RENLE Science&Technology Co., Ltd.





Shanghai RENLE Science & Technology Co., Ltd is a system integrator in solutions to industrial control and a professional manufacturer of industrial control and applied electrical. Our company's business covers industrial automation products, intelligent power distribution, automatic control systems, etc. Our product range includes medium and low voltage motor soft starters, medium and low voltage variable frequency drives, explosion-proof electrical apparatus, medium and low voltage reactive power compensation and harmonic suppression devices, energy storage systems, drive control systems, MCS, DCS, energy efficiency retrofit system and medium and low voltage power transmission and distribution equipment, etc. The products are widely used in electric power, metallurgy, petroleum and petrochemical industries, military industry, mining, chemical industry, construction, building materials, pharmaceutical industry, municipal works, textile printing and dyeing, paper making, rubber industry, rail transit, hydropower industry, aerospace technology, new energy battery industry, semiconductor industry, etc.



雷诺尔
Shanghai RENLE
Science&Technology Co., Ltd.

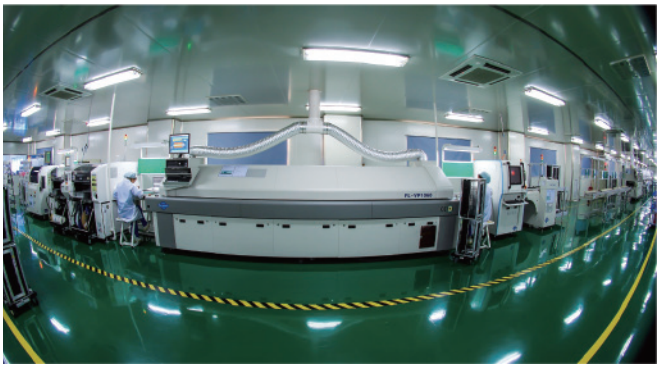

Shanghai RENLE has been honored with several National-level awards and major professional certifications, including the title of Unique and Innovative “Little Giant” Enterprise, High Technology Enterprise, and Shanghai Enterprise Technology Center. It is not only qualified with Second-level Qualification for Professional Contracting in Building Mechanical and Electrical Installation Engineering, but also participates in the drawing-up and revision of 17 national technical standards. Additionally, our company has obtained the following certifications: ISO9001 Quality Management System certification, ISO14001 Environmental Management System Certification, ISO 45001 Occupational Health and Safety Management System Certification, CE Certification of European Union, China Compulsory Certification (CCC), TÜV SÜD of German, Customs Union CU-TR Certification, Russian GOST Certification and Product Inspection Certification.

Shanghai RENLE's vision is to build a respected century-old enterprise with ever improving high technology. We specialize in promoting the quality of industrial automation products, the innovative design of equipment and systems, the development of superb research, and the provision of quality services. Improving productivity and energy efficiency for a better world is our commitment to each one of RENLE's clients.





RENLE

Technical innovation benefits the world



Scan the code to watch the product technical presentation video

RNMV-EI

INTELLIGENT HIGH VOLTAGE SOLID STATE SOFT STARTER

High voltage motors are important equipment at industrial sites. As the pre-driver of the motor, the high voltage soft starter is not only a starting device, but also a natural data source of the motor IoT;

With Industrial IoT 5G endorsement, and based on Renle's years of technology accumulation, the high voltage power modules realize full digitalization with the use of optical fiber multiplexing technology. The newly developed intelligent soft starters are equipped with standard industrial Ethernet and a variety of communication interfaces. Relying on industrial Ethernet, the soft starter realizes remote data analysis, remote software upgrade, remote debugging, remote virtual oscilloscope and other digital technologies.

RNMV-EI

INTELLIGENT HIGH VOLTAGE SOLID STATE SOFT STARTER

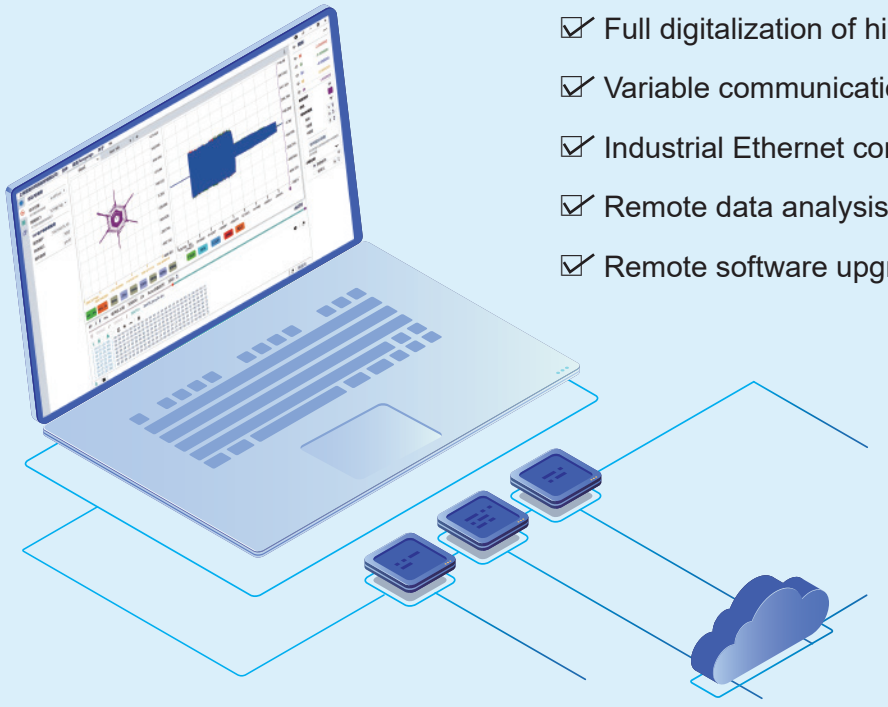

- ☑ Fiber multiplexing technology
- ☑ Full digitalization of high voltage power modules
- ☑ Variable communication interfaces
- ☑ Industrial Ethernet communication
- ☑ Remote data analysis
- ☑ Remote software upgrade

Data Visualization and Analysis

Real-time display of all data and running status

1. Connecting the soft starter to the IT platform through network protocol realizes the visualization of motor data with IT technology;
2. Connection to the cloud server provides data for big data analysis and related artificial intelligence algorithms;
3. Full use of computing power of the cloud platform realizes online analysis and diagnosis of motor operation status, fault warning and optimal control.

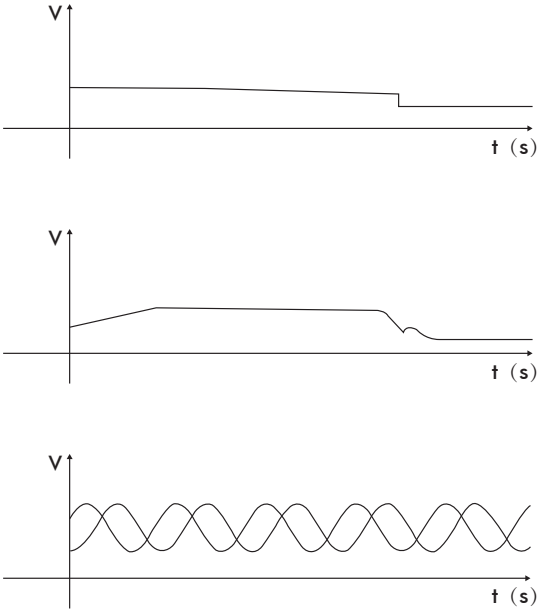

Model Description

RNMV – □□□ □□□□ – EI □

None: Regular;

S1: The cabinet contains circuit breaker, bypass contactor and soft starter (integrated cabinet);

S2: The cabinet includes grid side contactor, bypass contactor and soft starter;

S3: Mining;

EI: Intelligent series

Rated current: Maximum value of rated current of the motor; e.g.: "150A, 330A, 500A, 700A, 1000A";

Voltage level: Nominal voltage (-15~+10%);

Nominal value	030	033	060	066	100	110
Applicable range	3kV	3.3kV	6kV	6.6kV	10kV	11kV

Manufacturer's code: Shanghai Renle's high-voltage solid state soft starter

Note: Default protection level is IP4X

Standard

GB/T 311.1-2012《 Insulation co-ordination for high voltage transmission and distribution equipment - Part 1： Definitions, principles and rules 》

GB/T 3906-2020《 Alternating-current metal-enclosed switchgear and controlgear for rated voltages above 3.6 kV and up to and including 40.5 kV 》

GB/T 13422-2013《 Semiconductor converters - Electrical test methods 》

GB/T 3859.1-2013《 Semiconductor converters - General requirements and line commutated Converters - Part 1-1: Specification of basic requirements 》

GB/T 3859.2-2013《 Semiconductor converters - General requirements and line commutated converters - Part 1-2: Application guide 》

GB/T4208-2017《 Degrees of protection provide by enclosure (IP code) 》

IEC 62271-200:2021《 High-voltage switchgear and controlgear - Part 200: AC metal-enclosed switchgear and controlgear for rated voltages above 1 kV and up to and including 52 kV 》

IEC 60470《 High-voltage alternating current contactors and contactor-based motor-starters 》

IEC 61000《 Electromagnetic compatibility (EMC) 》

GB/T 20626.2-2018《 Specific environmental condition—Electrical and electronic products for plateau—Part 2: Selective types and testing specification 》

GB/T 11022-2020《 Common specifications for high-voltage alternating-current switchgear and controlgear standards 》

Executed standards of high voltage soft starter controller for general type for mining



GB/T 12173-2008《 Mining electrical apparatus for non hazardous area 》

JB/T 10251-2001《 AC power & electronic motor soft starters 》

GB/T 3859.1-1993《 Semiconductor converters - General requirements and line commutated Converters - Part 1-1: Specification of basic requirements 》

GB/T 3797-2016《 Electrical control assemblies 》

DL/T 593-2006《 Common specifications for high-voltage switchgear and controlgear standards 》

DL/T 404-2018《 Alternating-current metal-enclosed switchgear and controlgear for rated voltages above 3.6 kV and up to and including 40.5 kV 》

GB/T 14808-2016《 High-voltage alternating current contactors,contactor-based controllers and motorstarters 》

GB/T 20840.3-2013《 Instrument transformers—Part 3:Additional requirements for inductive voltage transformers 》

GB/T 20840.2-2014《 Instrument transformers—Part 2:Additional requirements for current transformers 》

Technical features

- Thyristor valve group series connection and dual power supply triggering technology is adopted;
- Optical fiber communication multiplexing technology is adopted for driving and data collection;
- HMI is adopted for real-time monitoring, display, modification, and set of system status and data.
- Equipped with OBD and software dual overvoltage protection functions.
- Statistics of valve group limit data are performed after each startup to evaluate the system status;
- With a phase-locked loop synchronously used, the three-phase conduction compensation technology controls the algorithm;
- Protections include: undervoltage, phase loss, overcurrent, overheating, thyristor overvoltage, triggering failure, abnormal voltage sharing, abnormal RC current, thyristor failure, optical fiber communication interruption, abnormal triggering power supply, etc. Start of the soft starter is prohibited when any abnormality is identified;
- Remote software update, commissioning, data waveform monitoring and fault analysis is realized through InterNet;
- After connecting to the cloud server through industrial Ethernet + 5G, the soft starter provides data for big data analysis and related AI algorithms, makes full use of the computing power of the cloud platform to realize online analysis and diagnosis of motor operating status, and realizes fault pre-warning and optimized control.

Soft Start Function

- Strong load adaptability, with 2 starting control modes:

① Constant current mode: Nominal current of motor start is limited in the range of 100-500%.

② Voltage ramp mode: Control angle makes the output voltage linearly rise to the rated voltage.

- Free stop or soft stop is optional: Suitable for different stop occasions to meet specific needs, such as to eliminate the water hammer effect of the water pump.

5G Industrial Ethernet Communication Technology

Based on industrial Ethernet + cloud platform,
in-depth technical support for field equipment is fully realized remotely.

Data reading->waveform display->data diagnosis->software upgrade

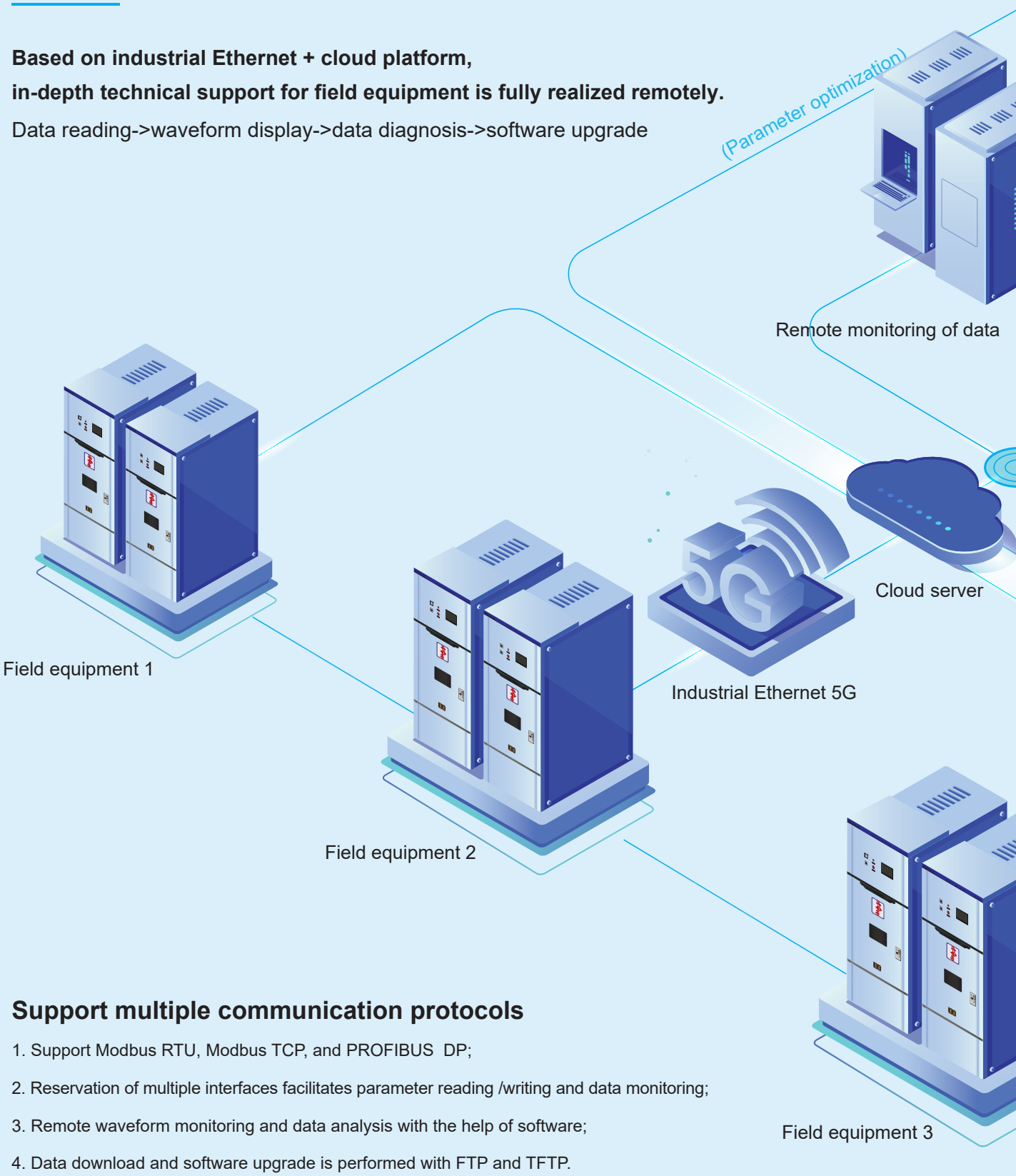

Support multiple communication protocols

1. Support Modbus RTU, Modbus TCP, and PROFIBUS DP;
2. Reservation of multiple interfaces facilitates parameter reading /writing and data monitoring;
3. Remote waveform monitoring and data analysis with the help of software;
4. Data download and software upgrade is performed with FTP and TFTP.

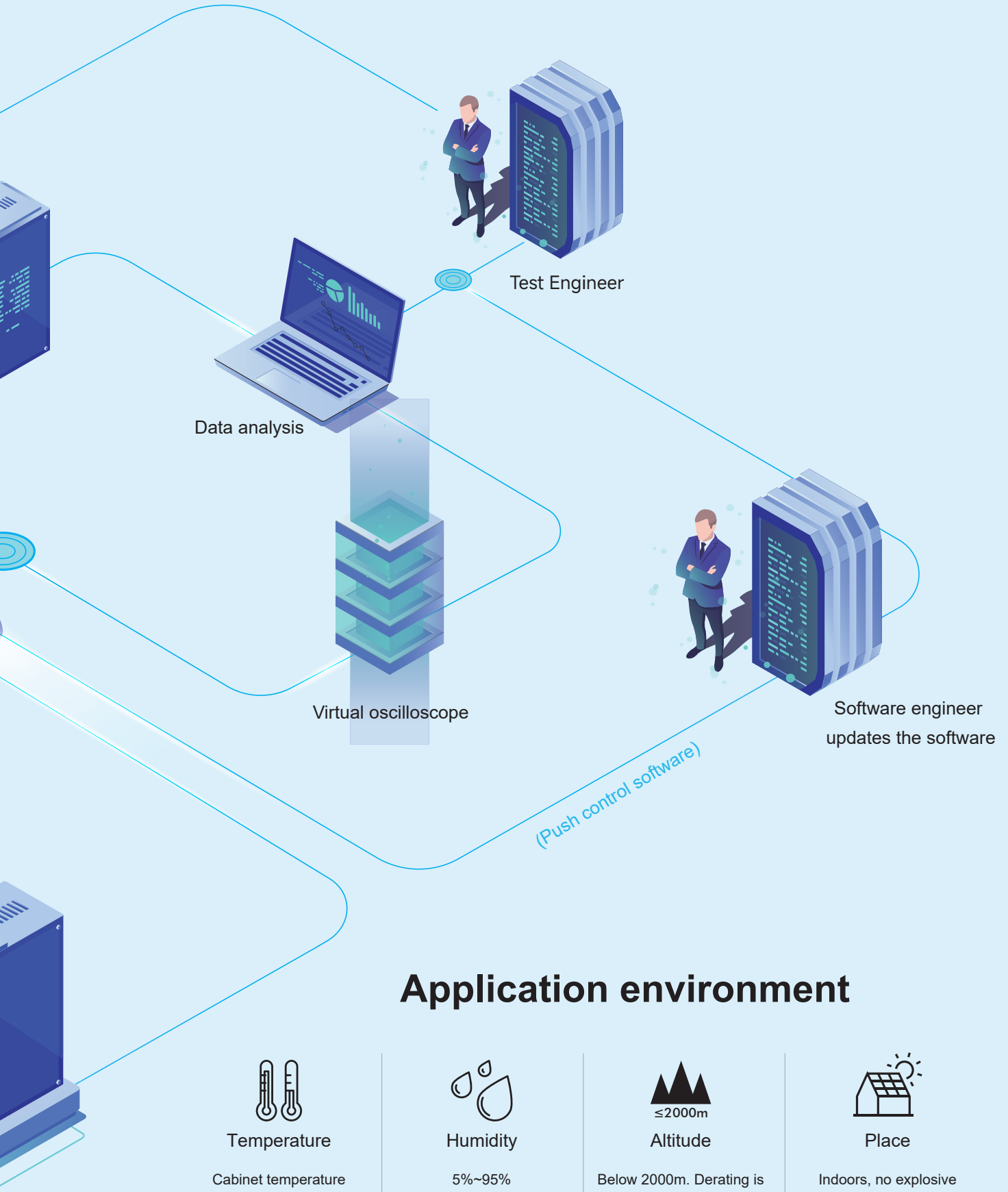

Application environment

Temperature	Humidity	Altitude	Place
Cabinet temperature 0°C~40°C (Optional heater for -20°C~0°C)	5%~95% relative humidity	Below 2000m. Derating is necessary for altitude above 2000m	Indoors, no explosive or corrosive gas, with low dust

Operation Panel

RNMV-EI series soft starters monitor status and display data with HMI.

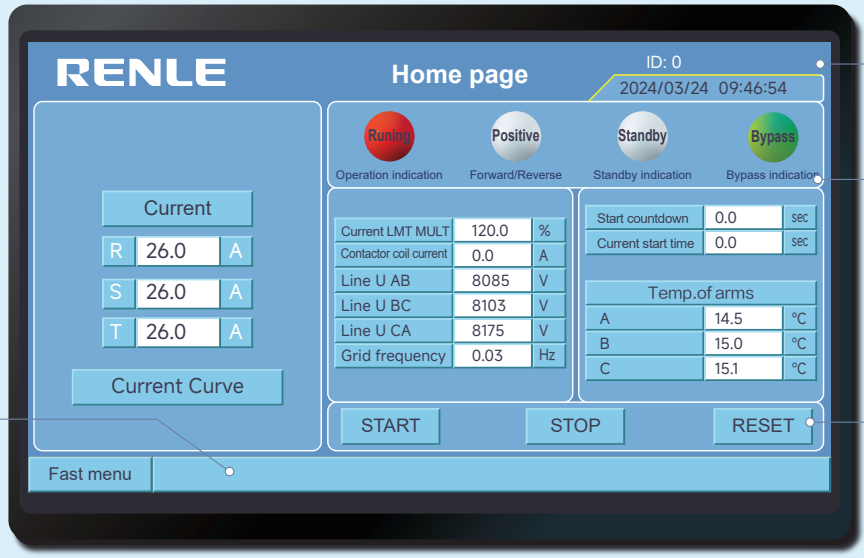

Mainboard ID

Equipment status bar

When the status of the soft starter changes, the corresponding indicator lamp will change accordingly.

Event scrollbar

Display the corresponding event when it occurs.

Equipment operation bar

If it is not logged in or operated remotely, the corresponding buttons are hidden in gray scale.

Indicator lamp name	Function
Running indicator lamp	Red color indicates the soft starter is in running state; otherwise, the lamp is green.
Positive phase sequence /reverse phase sequence	This lamp indicates the incoming line phase sequence of the equipment's power supply.
Standby indicator lamp	When the equipment is in the shutdown state, it can be started normally with the indicator lamp being white. The indicator lamp is otherwise gray if it can not be started.
Bypass indicator lamp	If the indicator is orange, the device is successfully started and enters the bypass state. Otherwise the lamp is green.

Data name	Description
Current limiting multiple	Currently set starting current limiting multiple, equal to the setting value of parameter n112.
Phase sequence	Incoming line phase sequence of existing equipment. 1 represents positive phase sequence, -1 represents reverse phase sequence.
Line voltage	Existing grid line voltage.
Power	Existing motor output power.
cosΦ	Existing motor power factor.
Grid frequency	Existing grid frequency.
Zero sequence current	Existing zero sequence current.
Module temperature	Maximum temperature of module at each phase.
Current	Existing three-phase current of the motor.

Full digitalization of power modules

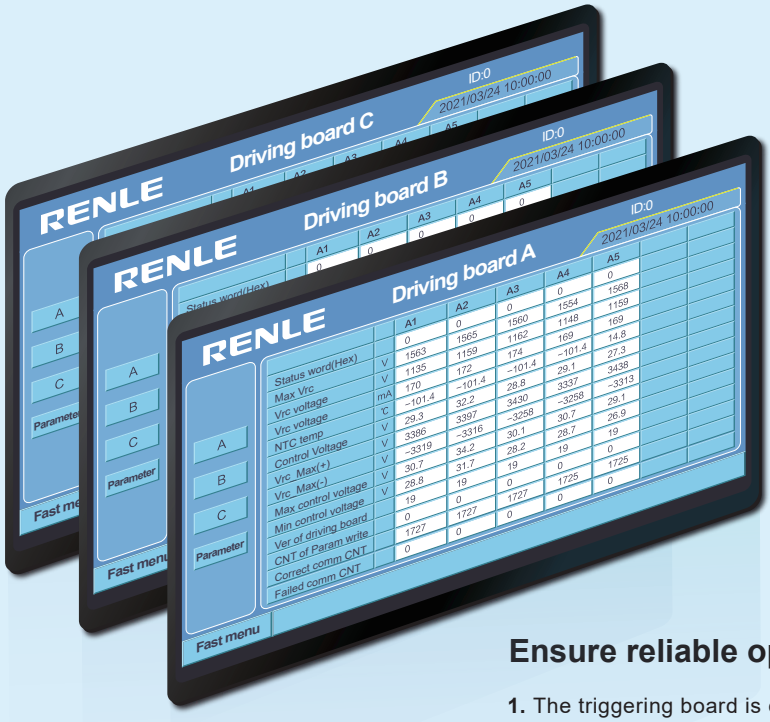

Ensure reliable operation of series thyristors

1. The triggering board is equipped with an MCU monitoring system which records the status of the power modules of each start.
2. Collect important data of power modules at each level:
● Vrc voltage: Existing voltage over each RC group;
● Forward and reverse Vrc peak voltage: Forward and reverse peak voltage over each RC when the soft starter is started;
● Control voltage: The average/maximum/minimum value of control voltage of each group of positive triggering boards;
● RC current: Average current value of each group of RC.
3. Standard SCR overvoltage self-triggering function and hardware and software dual settings, ensure the safety of SCR.

Technical Parameters

Data Name	Working Range
Rated working voltage	3~13.8kV（-15%~+10%）
Frequency	50Hz/60Hz±2Hz（selected according to user's grid）
Overload capacity	400% control nominal value 60s 500% control nominal value 30s
Applicable motor	Three-phase squirrel-cage asynchronous and synchronous motor
Application environment	
Temperature	Cabinet temperature 0°C~40°C, (Heater is optional for -20°C~0°C)
Humidity	5%~95% relative humidity
Altitude	Below 2000m. Derating is necessary for altitude above 2000m.
Place	Indoors, no explosive or corrosive gas, with low dust.
Cooling	Natural cooling
Protection level	IP4X

Structural features

Operation power supply	2kVA AC220V supplied by the user (can be specified).
Main circuit	The number of thyristors is determined by the model.
Communication protocol	Integrated Modbus RTU, Modbus TCP, CAN and PROFIBUS DP communication protocols, equipped with interface.
Communication interface	RJ45
Operation interface	7-inch touch screen (HMI) which monitors system status in real-time. Used for setting and modifying parameters.
Event record	It can continuously record events and historical curves with time and date stamps within 10 days.
Performance monitoring	Current, voltage, power factor, module temperature, RC average and peak voltage, RC current, etc.
Input and output options	10 channels of 24VDC programmable inputs, 2 channels of 16A and 4 channels of 5A programmable outputs, 1 analog programmable output (4~20mA).
User management	Multi-level user password protection (can be specified).
Interface language	Chinese, English, Russian (can be specified)
Thyristor	Thyristor valve group in series.
Drive and data	Dual power supply triggering, optical fiber communication multiplexing technology; Adopting synchronous phase-locked loop, three-phase conduction compensation algorithm; Equipped with OBD and software double overvoltage function; After startup is completed, the valve group limit data are counted for evaluating the system status.
Monitoring	HMI window, used for real-time monitoring of system status, collection of valve group data and setting and modification of control parameters.
Protection	Undervoltage, overvoltage, phase loss, overheating, abnormal voltage sharing, abnormal RC current, thyristor failure, optical fiber communication interruption, abnormal triggering power supply etc.
Cloud service	Remote software update, commissioning, data waveform monitoring and fault analysis is realized through InterNet; After connecting to the cloud server through industrial Ethernet + 5G, the soft starter provides data for big data analysis and related AI algorithms; makes full use of the computing power of the cloud platform to realize online analysis and diagnosis of motor operating status, and realizes fault pre-warning and optimized control.
Cabinet color	Selected by the user.

Start data

Starting current	Adjustable within 4 times of the rated current of the motor.
Starting time	Adjustable within 10~60 seconds.
Number of starts	6 times per hour at an ambient temperature of 25°C.
Starting interval	No less than 5 minutes between two starts.

Protection parameters

Transient overcurrent	Protection range 200%~800%
Inverse time overcurrent	The protection time is 1 minute for 1.5 times, used for protecting the motor during bypass operation.
Incoming line undervoltage	Range: 0%~100%
Grounding	Ground protection is identified by zero-sequence current.
Output phase loss	Set the threshold 1.0%~50% according to the parameters by comparison of the three-phase output current.
Thyristor breakdown	Set action threshold through parameters by monitoring voltage of each level of thyristors.
RC current	Monitor RC current of each level of thyristors and identity RC working status. Current deviation can be set.
Trigger failure	During startup, the number of triggering failure exceeds the set parameter value within 2 seconds of detection window, so protection acts.
Start timeout	The start time exceeds the set value.
Triggering power	If the power of the triggering board is lower or higher than the hardware protection value, protection of triggering board power acts.
Temperature	SCR temperature exceeds the set parameters.
Thyristor overvoltage	During the starting process, each level of SCR is equipped with OBD protection. During one starting process, the number of overvoltage automatic triggering reaches the set parameter, the protection is performed.

Schematic Diagram of Input and Output Interfaces

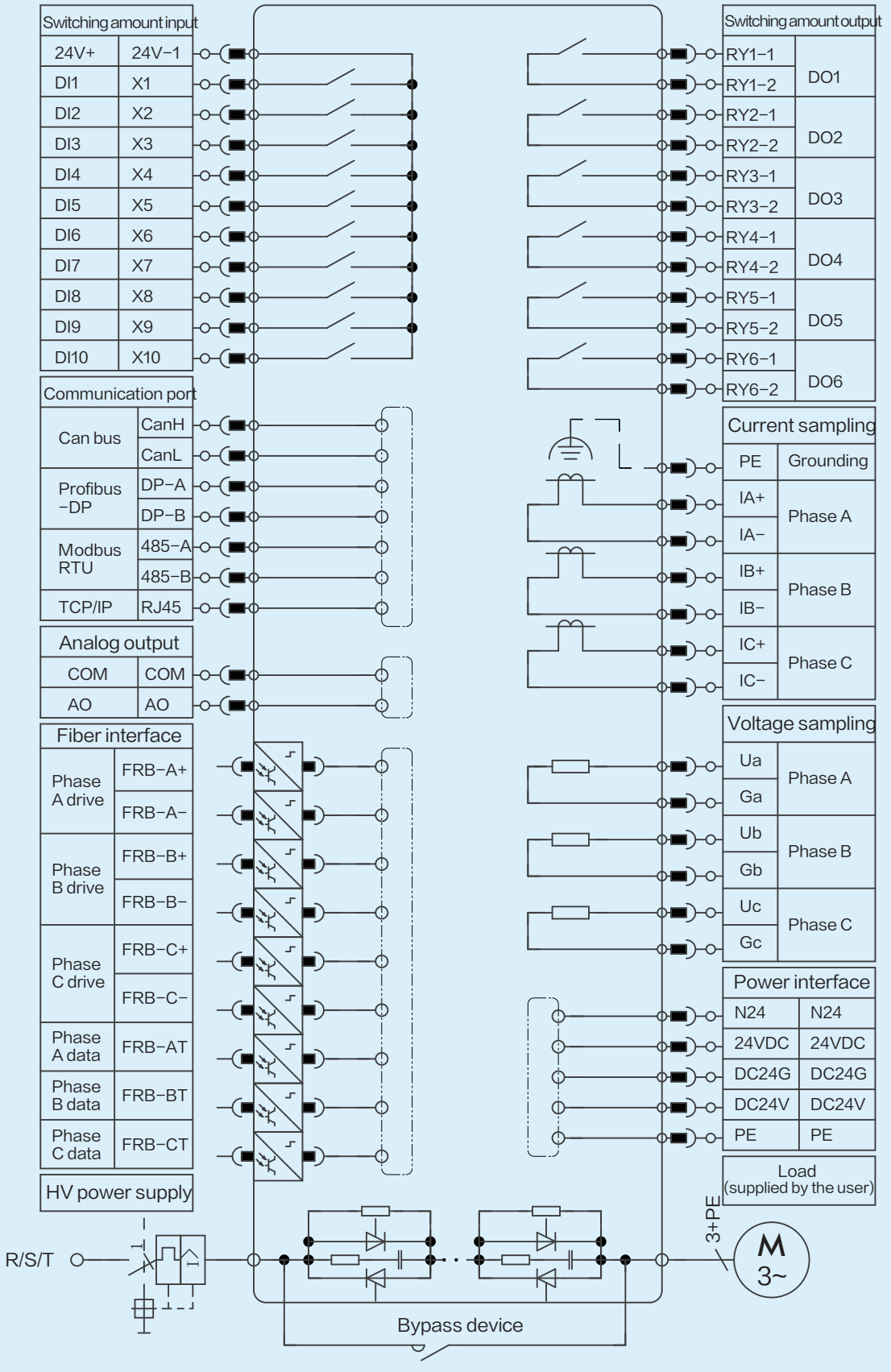

System Composition

The system consists of three phase contact arms A, B, C.

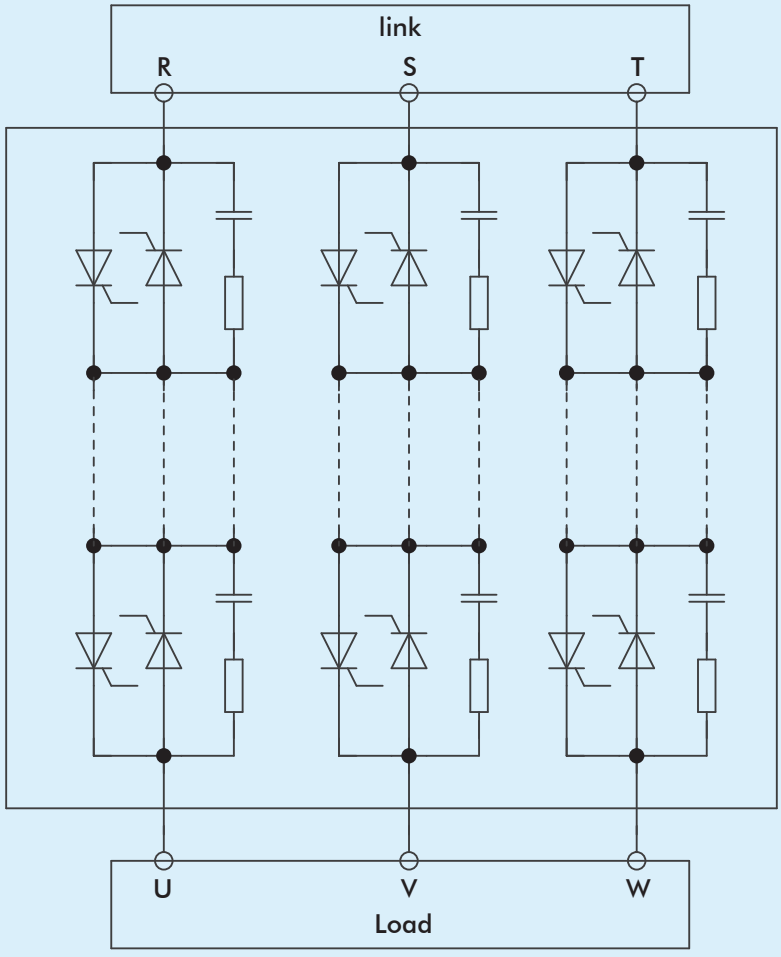

Topology diagram of power modules

Each thyristor series valve group includes: thyristor, driving board, power supply and optical fiber board, and voltage sharing RC;

Thyristor: the main power device, the specific data of which are determined by the device current and the system voltage;

Driving board: Convey the control commands given out by the main control board to control the on-off of the thyristors;

Power supply and fiber optic board: accept instructions of the main control board to provide driving power and driving commands for the driving board, and return data collected by the driving board to the main control board;

Voltage sharing RC: balance the voltage distribution on the thyristors of the series valve group and accelerate turning off of thyristors.

Primary Control Plan

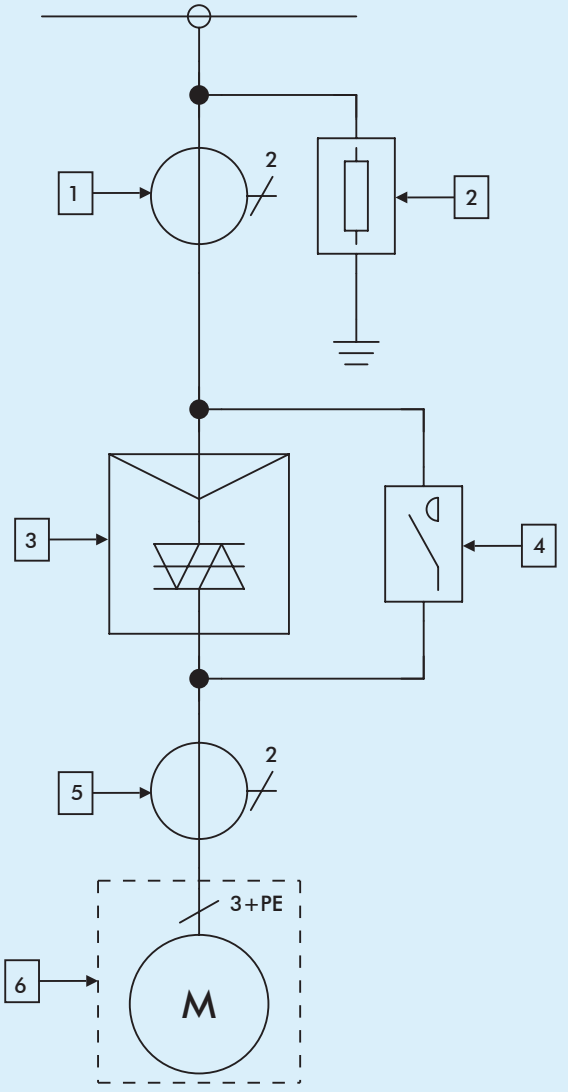

Primary Control Plan

1. Current transformer: Used for current measurement and current control;
2. Voltage sensor: Used for voltage measurement, phase sequence detection, synchronous sampling and voltage control;
3. Thyristor series valve group: It includes thyristors, drive, protection, detection, voltage sharing and heat dissipation, etc.;
4. Bypass contactor: Used to switch the main circuit to power frequency after successful soft start;
5. Zero sequence transformer: Optional;
6. Squirrel cage motor: Provided by the customer;
Note: If it is necessary to connect a reactive power compensation device, it can only be connected to the power supply end of the soft starter, and cannot be installed at the output end of the soft starter.

General Application Schematic Diagram

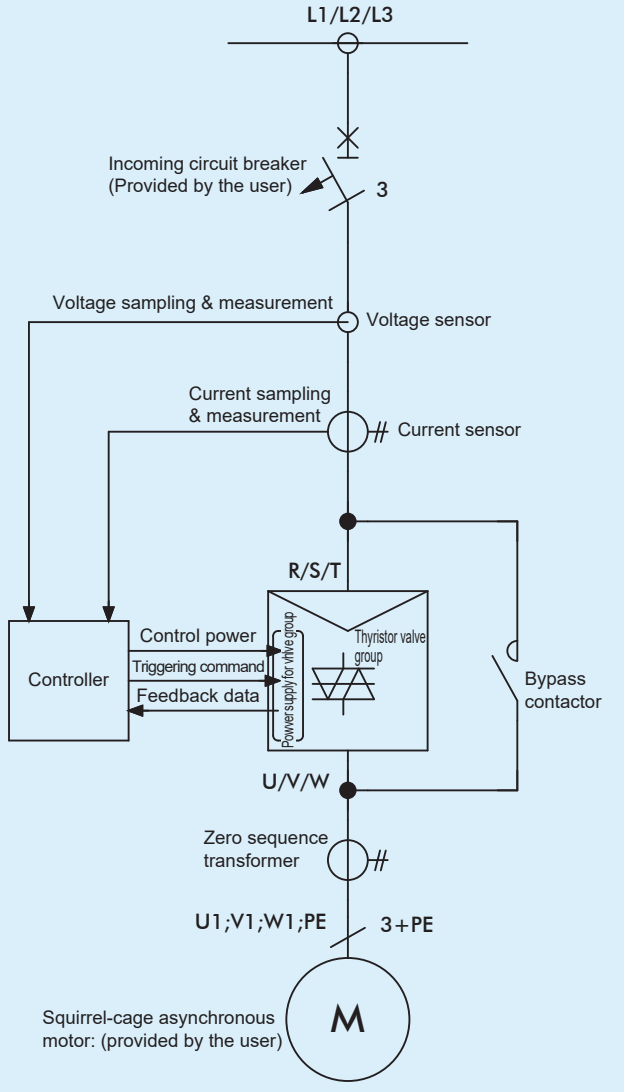

General Application Schematic Diagram

1. Incoming circuit breaker: Provided by the user;
2. Voltage sensor: Used for voltage detection, phase sequence detection and synchronous sampling;
3. Current sensor: Used for current detection;
4. Thyristor valve group: Strictly screened anti-parallel thyristor string;
5. Controller: The core of soft-start control;
6. Bypass contactor: For switching the motor to power frequency after starting;
7. Zero sequence transformer: Optional;
8. Squirrel-cage motor: Provided by the user.

Conventional Secondary Schematic Diagram

Input command

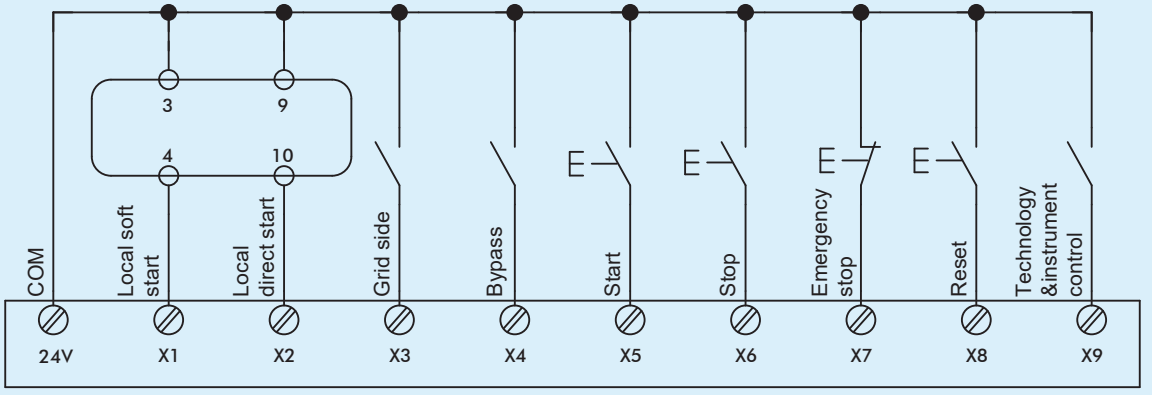

Output command

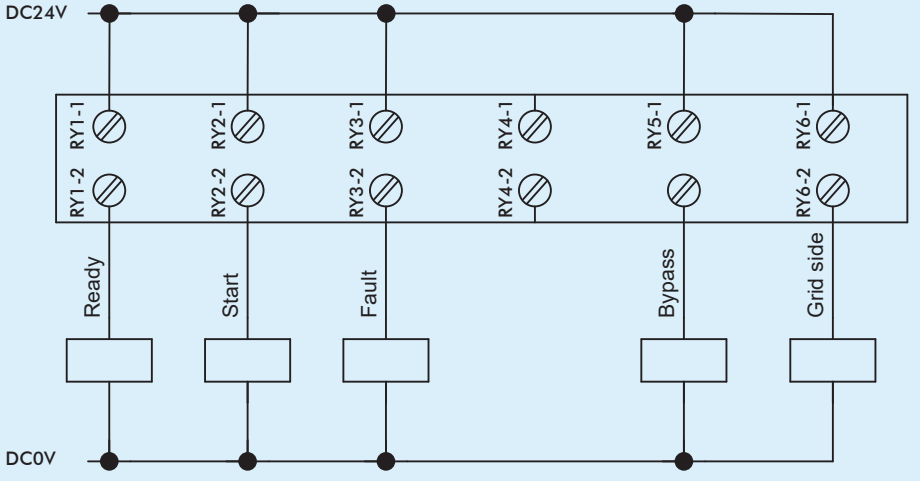

Voltage detection

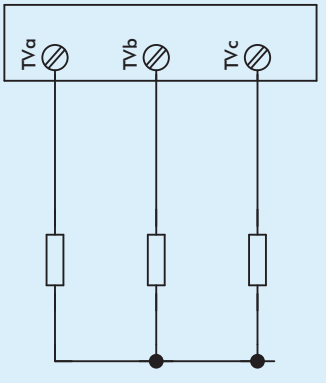

Current detection

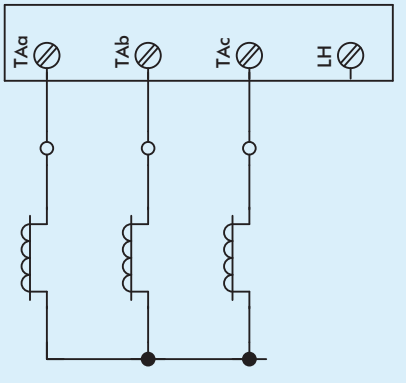

Application Scheme Diagram

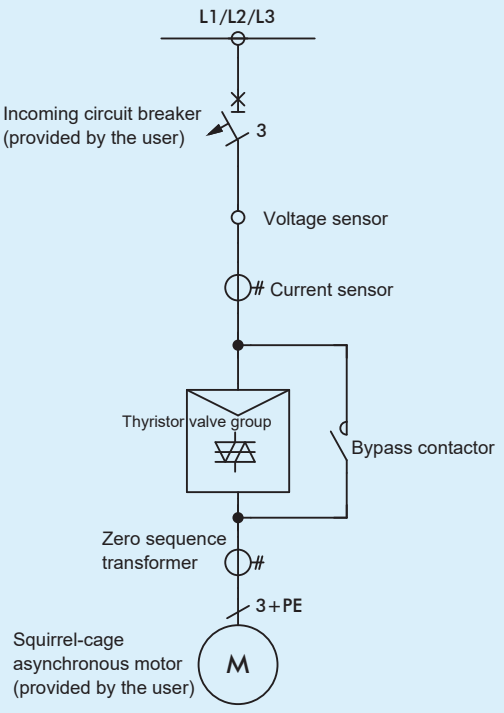

Conventional plan

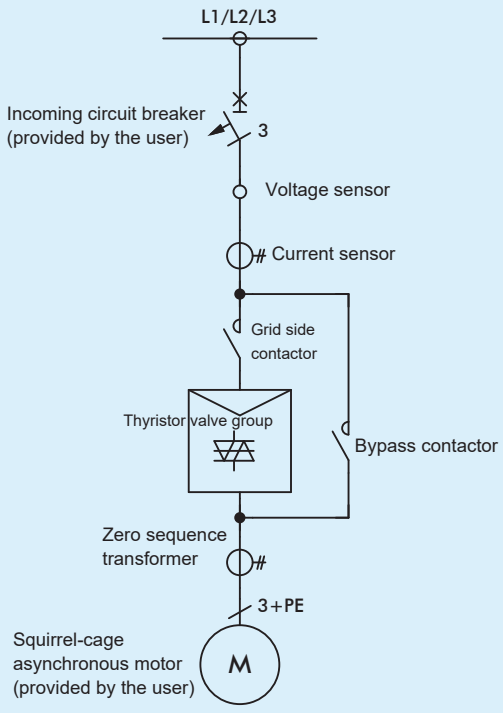

Plan with grid side contactor

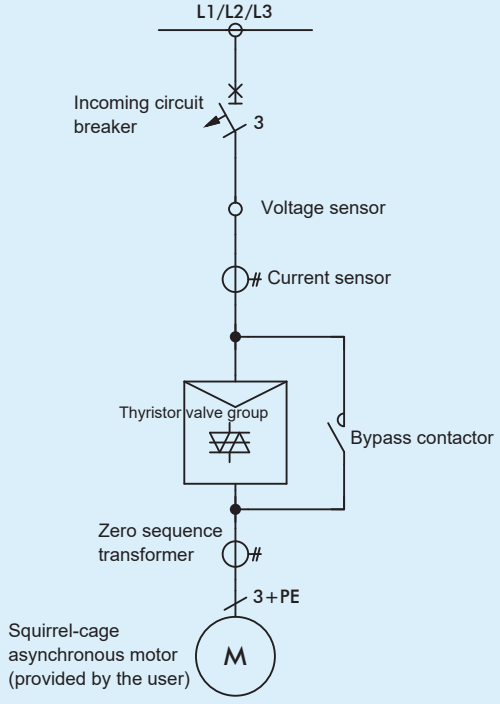

“Three-in-one” plan

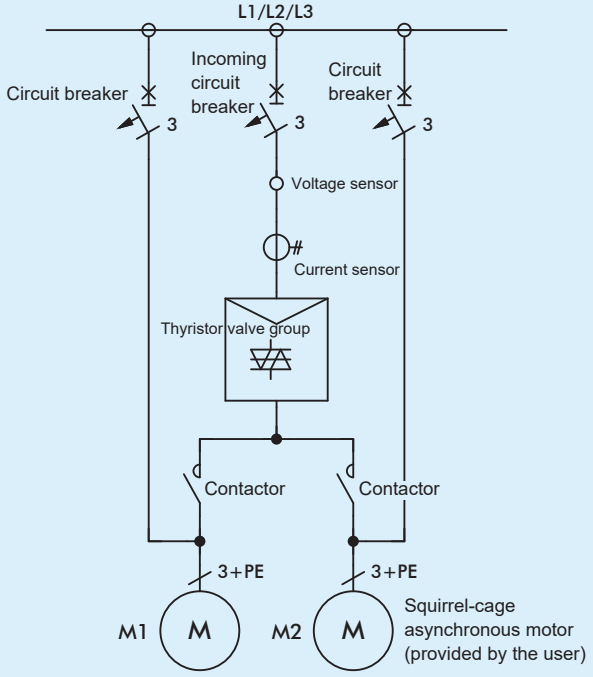

“One drives two” plan

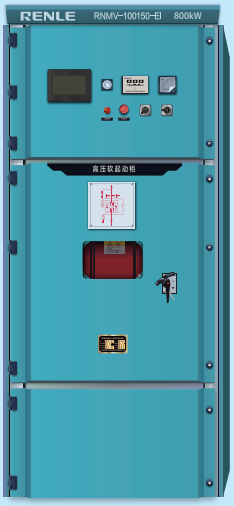

Conventional type

High-voltage Solid-state Soft Starter

- ☑ Fiber multiplexing technology
- ☑ Full digitalization of high voltage power modules
- ☑ Various communication interfaces
- ☑ Industrial Ethernet communication
- ☑ Remote data analysis
- ☑ Remote software upgrade



Front view



Back view

Schematic Diagram of Conventional Cabinet

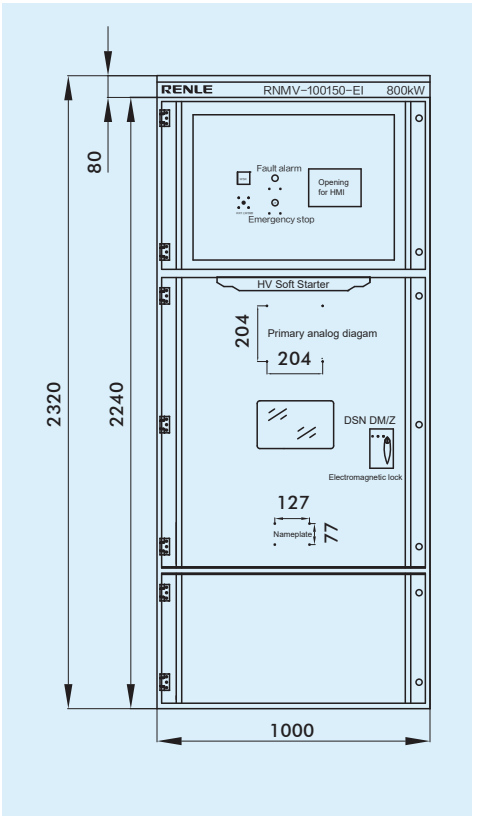

Front view

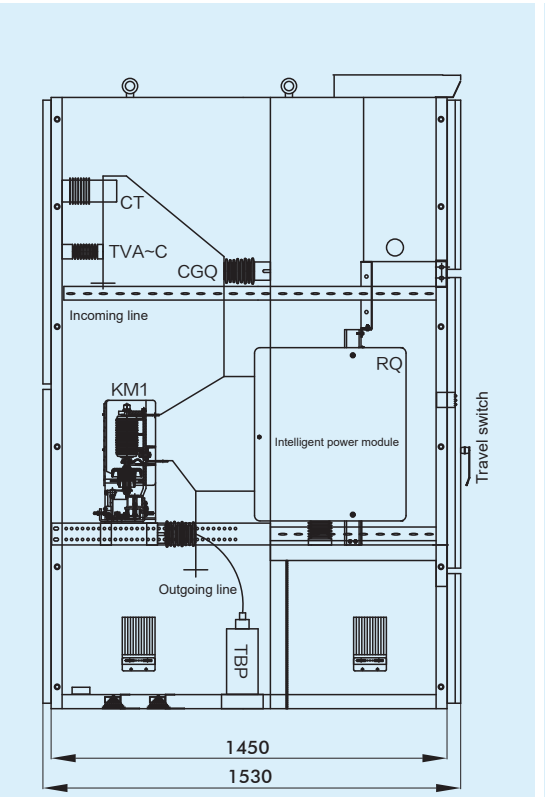

Side view

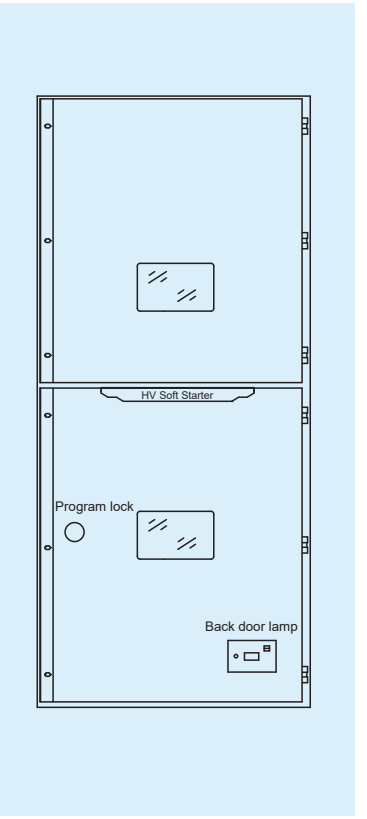

Back view

Installation method

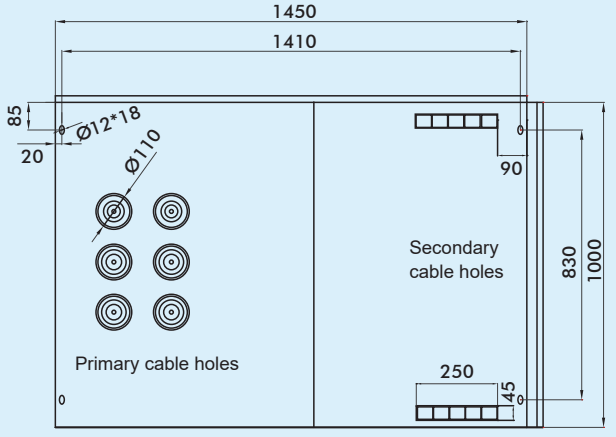

Bottom Installation Dimension
Diagram of High-voltage Solid-state Soft Starter

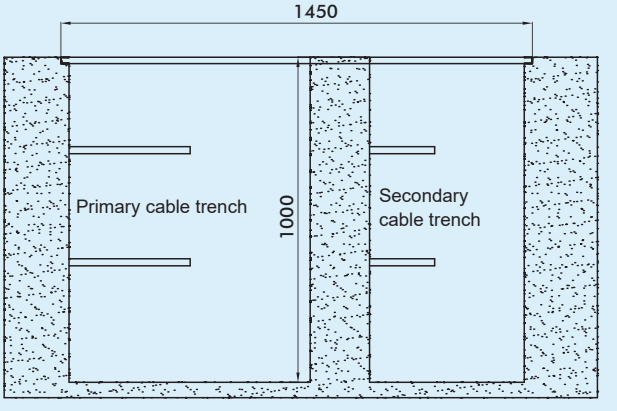

Installation Base Diagram of
High-voltage Solid-state Soft Starter

Soft Starter Selection Table

RENLE

Valve group current (A)	Voltage (kV)	Max. power of universal motor (kW)	Specifications	Cabinet dimensions (H×W×D,mm)	Weight (t)
150	3	630	RNMV-030150	2300*800*1500	0.7
150	3.3	650	RNMV-033150	2300*800*1500	0.7
150	6	1250	RNMV-060150	2300*800*1500	0.7
150	6.6	1350	RNMV-066150	2300*800*1500	0.7
150	10	2000	RNMV-100150	2300*800*1500	0.75
150	11	2240	RNMV-110150	2300*800*1500	0.75
330	3	1350	RNMV-030330	2300*1000*1500	0.78
330	3.3	1500	RNMV-033330	2300*1000*1500	0.78
330	6	2700	RNMV-060330	2300*1000*1500	0.8
330	6.6	3000	RNMV-066330	2300*1000*1500	0.8
330	10	4500	RNMV-100330	2300*1000*1500	0.8
330	11	5000	RNMV-110330	2300*1000*1500	0.8
500	3	2000	RNMV-030500	2300*1100*1500	0.85
500	3.3	2240	RNMV-033500	2300*1100*1500	0.85
500	6	4000	RNMV-060500	2300*1100*1500	0.85
500	6.6	4500	RNMV-066500	2300*1100*1500	0.85
500	10	6800	RNMV-100500	2300*1100*1500	1
500	11	7600	RNMV-110500	2300*1100*1500	1
700	3	2800	RNMV-030700	2300*1200*1500	1
700	3.3	3150	RNMV-033700	2300*1200*1500	1
700	6	5800	RNMV-060700	2300*1200*1500	1.2
700	6.6	6300	RNMV-066700	2300*1200*1500	1.2
700	10	9600	RNMV-100700	2300*1200*1500	1.25
700	11	10000	RNMV-110700	2300*1200*1500	1.25
1000	3	4000	RNMV-0301000	2300*1400*1500	1.5
1000	3.3	4500	RNMV-0331000	2300*1400*1500	1.5
1000	6	8200	RNMV-0601000	2300*1400*1500	1.8
1000	6.6	9100	RNMV-0661000	2300*1400*1500	1.8
1000	10	13500	RNMV-1001000	2300*1400*1500	1.8
1000	11	15000	RNMV-1101000	2300*1400*1500	1.8



Integrated cabinet High-voltage Solid-state Soft Starter

- ☑ Fiber multiplexing technology
- ☑ Full digitalization of high voltage power modules
- ☑ Various communication interfaces
- ☑ Industrial Ethernet communication
- ☑ Remote data analysis
- ☑ Remote software upgrade



Front view

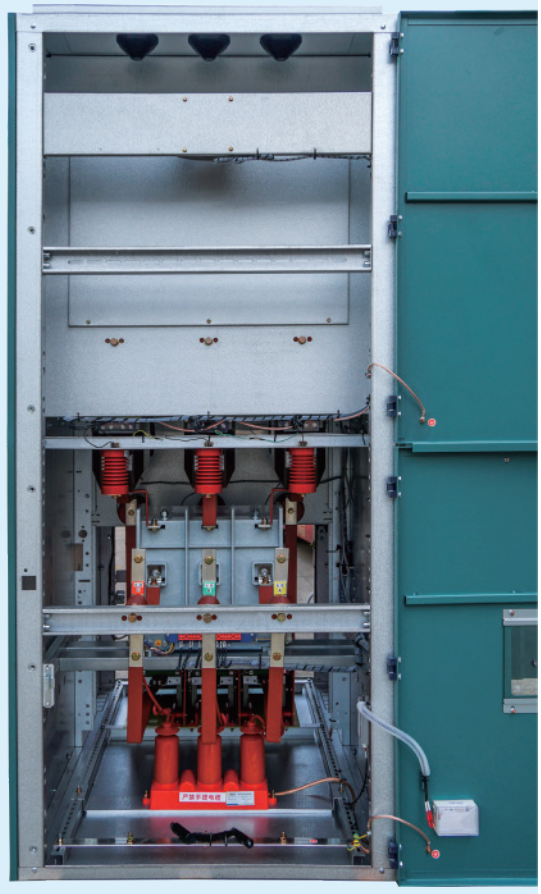

Back view

Cabinet dimensions (“Three-in-one” integrated type)

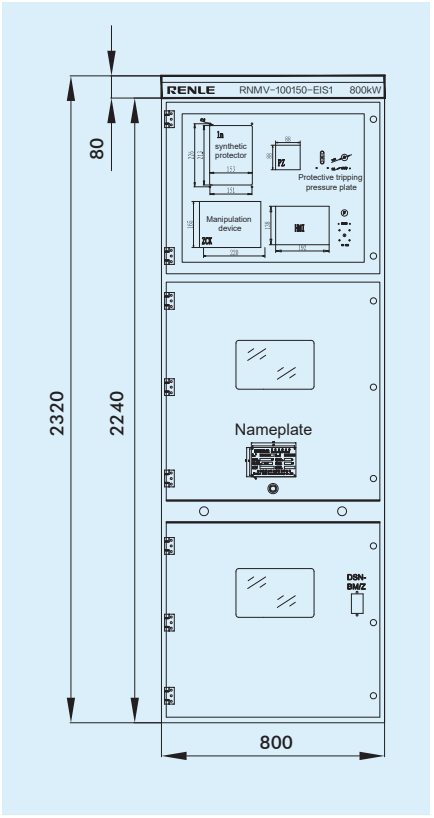

Front view

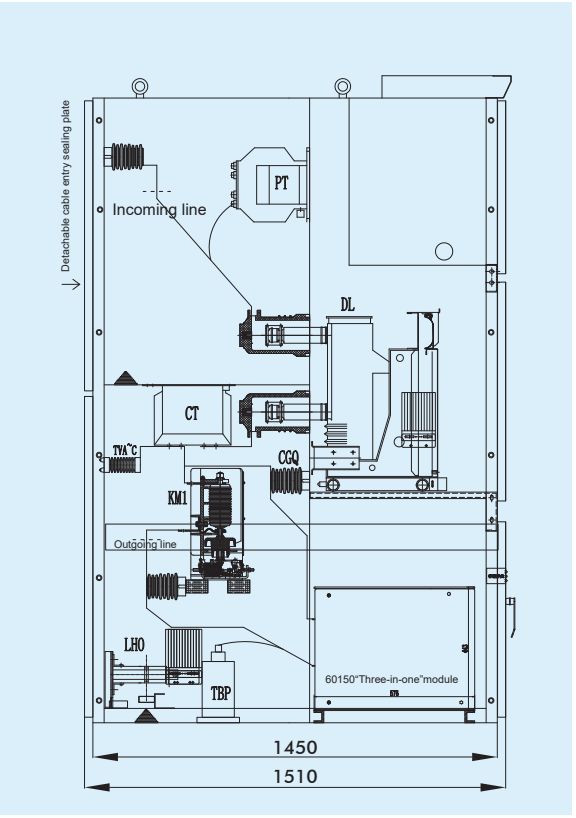

Side view

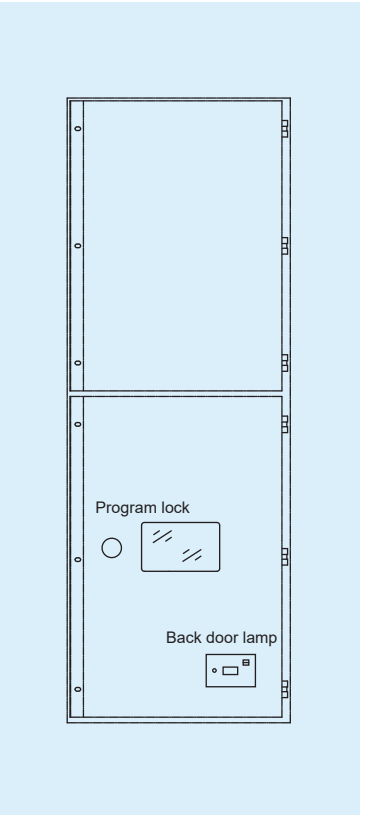

Back view

Installation method

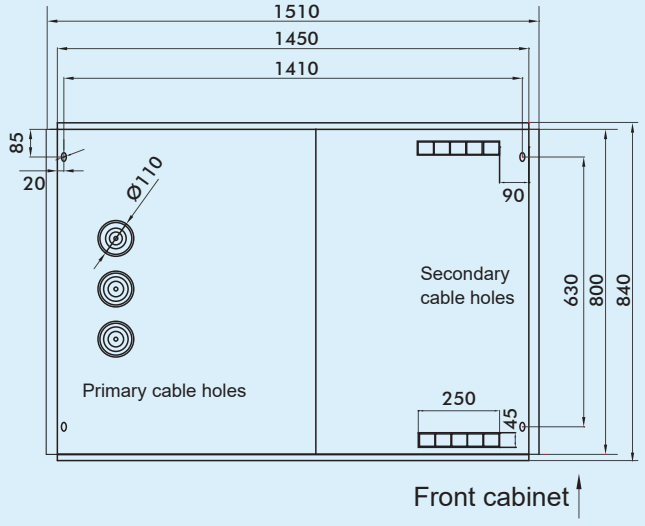

Bottom Installation Dimension Diagram of High-voltage Solid-state Soft Starter

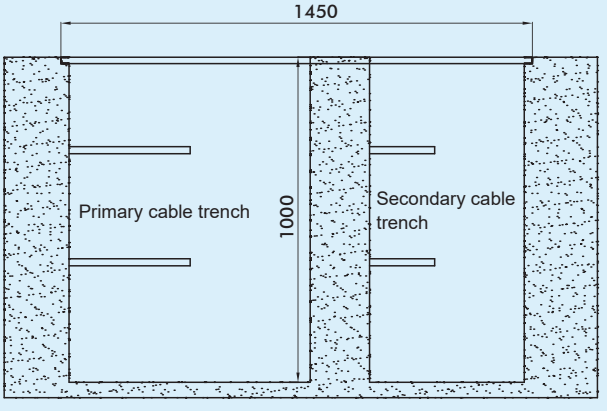

Installation Base Diagram of High-voltage Solid-state Soft Starter

Integrated Soft Starter Selection Table

Valve group current (A)	Voltage (kV)	Max. power of universal motor (kW)	Specifications	Cabinet dimensions (H×W×D,mm)	Weight (t)
150	3	560	RNMV030150	2300*800*1500	0.7
150	3.3	630	RNMV033150	2300*800*1500	0.7
150	6	1250	RNMV060150	2300*800*1500	0.7
150	6.6	1350	RNMV066150	2300*800*1500	0.7
150	10	2000	RNMV100150	2300*800*1500	0.7
150	11	2240	RNMV100150	2300*800*1500	0.7
330	3	1350	RNMV030300	2300*1000*1500	0.85
330	3.3	1500	RNMV033300	2300*1000*1500	0.85
330	6	2700	RNMV060300	2300*1000*1500	0.85
330	6.6	3000	RNMV066300	2300*1000*1500	0.85
330	10	4500	RNMV100300	2300*1000*1500	0.85
330	11	5000	RNMV110300	2300*1000*1500	0.85

We strive to assist more industries in development by providing quality products.

RNMV-EI intelligent high voltage solid state soft starter can be used in many industries, such as electric power, metallurgy, petroleum, petrochemical, mining, building materials, chemical industry, municipal , etc., providing compact, stable and reliable soft starting solution for control of high voltage motors. With a complete set of motor and system protection functions, Renle's soft starters have reliable performance even in the harshest environments. With abundant user interfaces and modularization design, our intelligent soft starters can meet the starting needs of large and medium-sized general machinery in modern industries.

We are always ready to provide you with suitable solutions!



Electric power industry

China Datang Corporation Datang Gansu Power Generation Co., Ltd.
China Huadian Group Co., Ltd. Guizhou Huadian Tangzhai Power Generation Co., Ltd.
China Datang Corporation Datang Lubei Power Generation Co., Ltd.
Huadian International Power Co., Ltd.
Anhui Huadian Lu'an Power Plant Co., Ltd.
China Huadian Corporation Limited Hubei Xiangyang Huadian Power Generation Co., Ltd. Shandong Wangchao Coal Power Group New Energy Power Generation Co., Ltd.
China Guodian Group Inner Mongolia Guodian Energy Investment Co., Ltd. Xilin Thermal Power Plant
Shanxi Lu'an Ronghai Power Generation Co., Ltd.
Shanxi Datang International Shentou Power Generation Co., Ltd.
State Power Investment Corporation Nanyang Yahekou Power Generation Co., Ltd.
Hengan (China) Investment Co., Ltd. Weifang Hengan Thermal Power Co., Ltd.
Hangzhou Thermal Power Group Co., Ltd. Shaoxing Shangyu Hangxie Thermal Power Co., Ltd.
China Power International Development Co., Ltd. Huanggang Dabieshan Power Generation Co., Ltd.
China Power International Development Co., Ltd. Shanxi Shentou Power Generation Co., Ltd.
China Huadian Group Co., Ltd. Shaanxi Huadian Yuheng Coal and Electricity Co., Ltd.
Shaoxing Shangyu Hangxie Thermal Power Co., Ltd.
Shandong Runyuan Biomass Power Generation Co., Ltd.
Shandong Zaozhuang Jianyang Thermal Power Co., Ltd.
Shandong Zhucheng Longguang Thermal Power Co., Ltd.
Shandong Weihai Thermal Power Group Co., Ltd.

Steel industry

Baoshan Iron & Steel Co., Ltd. Shanghai Meishan Iron & Steel Co., Ltd.
Pangang Group Co., Ltd.
Tonghua Iron and Steel Co., Ltd.
Shandong Iron and Steel Group Laiwu Iron and Steel Xinjiang Co., Ltd.
Zhongtian Iron and Steel Group Co., Ltd.
Benxi Iron and Steel (Group) Co., Ltd.
Donghai Iron and Steel Group Co., Ltd.
Xuanhua Iron and Steel Group Co., Ltd.
Ma'anshan Iron and Steel Co., Ltd.
Nanjing Iron and Steel Group Co., Ltd.
Jianlong Steel Holdings Limited
Jiangsu Xugang Iron and Steel Group Co., Ltd.
Liuzhou Iron and Steel Co., Ltd.
Wu'an Yuhua Iron and Steel Co., Ltd.
Anyang Iron and Steel Co., Ltd.
Hebei Zongheng Iron and Steel Group Co., Ltd.
Yingkou Iron and Steel Co., Ltd.
Tangshan Donghua Iron and Steel Enterprise Group Co., Ltd.
Ningxia Shenyin Special Steel Co., Ltd.
Xinji Aosen Iron and Steel Group Co., Ltd.





Chemical industry

Inner Mongolia Datang International Duolun Project with an annual output of 460,000 tons of coal-based olefins.
Shenhua Mengxi Coal Chemical Co., Ltd. 960,000 tons of stamped coke co-production 100,000 tons of methanol project.
Xinjiang Jinsheng Populus Populus Chemical Co., Ltd. annual output of 600,000 tons of nitro compound fertilizer project.
Inner Mongolia Datang International Keshigten Coal-to-Gas Co., Ltd.
Xinjiang Kingho Energy Group Co., Ltd.
Jiangxi Lanxinghuo Silicone Co., Ltd. Shanghai Chlor-Alkali Chemical Co., Ltd.
Sinopec Sichuan Vinylon Plant.
Gaomi Kingboard Chemical Co., Ltd.
Abel Chemical (Jiangsu) Co., Ltd.
Qinghai Zhonghao Natural Gas Chemical Co., Ltd.
Qinghai Salt Lake Industry Co., Ltd.
Jintaoyuan Coal Coking Group Co., Ltd.
Jiangsu Changlong Chemical Co., Ltd.
Xinjiang Shengxiong Energy Co., Ltd.
Xianglu Petrochemical (Zhangzhou) Co., Ltd.
Xinjiang Meifeng Chemical Co., Ltd.
Shanxi Hongyuan Fukang New Energy Co., Ltd.
Shaanxi Shanhua Coal Chemical Co., Ltd.
Inner Mongolia Yidong Group Dongxing Chemical Co., Ltd.
Xinjiang Yihua Chemical Co., Ltd.

Petroleum Industry

PetroChina Liaohe Oilfield Branch.
PetroChina Refining and Chemical Engineering Construction Project.
Huabei Oilfield Keda Development Co., Ltd.
PetroChina Karamay Oilfield Branch.
Qingdao PetroChina Storage Co., Ltd.
Jianghan Petroleum Drilling Bits Co., Ltd.
China National Petroleum Corporation Qinghai Oilfield Branch.
China National Petroleum Corporation Hainan Fushan Oilfield Exploration and Development Co., Ltd.
Sinopec Natural Gas Sichuan-East Gas Transmission Pipeline Branch.
Shandong Huafeng Petroleum Technology Co., Ltd.
CNOOC Guangxi Fangchenggang Natural Gas Co., Ltd.
CNOOC Tianjin LNG Co., Ltd. CNOOC Huizhou Petrochemical Co., Ltd.
Qingdao PetroChina Storage Co., Ltd.
Sinopec Shengli Oilfield Co., Ltd.
PetroChina Sichuan Petrochemical Co., Ltd.
Sinopec Shengli Oilfield Co., Ltd.
PetroChina Dagang Oilfield Company.
Shengli Oilfield Marine Electric Co., Ltd.
PetroChina Daqing Oilfield Co., Ltd.





Coal industry

Shanxi Xiyang Fenghui Coal Industry Co., Ltd.
Guangxi Bainahe Mining Co., Ltd.
Zaozhuang Mining (Group) Co., Ltd.
Shanxi Lanhua Coking Coal Baoxin Coal Industry Co., Ltd.
Xinjiang Xinsai Shuanglu Mining Co., Ltd.
Shanxi Coal Import and Export Group Zuoyundong Gucheng Coal Industry Co., Ltd.
Qinghai Jiangcang Coal Industry Co., Ltd.
Shenhua Ningxia Coal Industry Group Co., Ltd.
Guizhou Panxian Zisenyuan Group Company
Xinjiang Tunnan Coal Industry Co., Ltd.
Jiangxi Fengcheng Qujiang Coal Development Co., Ltd.
Huating Coal Industry Group Co., Ltd.
Kailuan (Group) Weizhou Mining Co., Ltd. Shanxi Provincial Coke Group Co., Ltd.
Yutian County Guyu Coal Coking Co., Ltd. Shandong Yankuang Group Co., Ltd.
Inner Mongolia Shendong Coal Company.
Shanxi Coal Group Zuoquan Xinshun Coal Industry Co., Ltd.
Jingyuan Coal Industry Group Co., Ltd.
China Pingmei Shenma Group.

Water conservancy industry

Gansu Province Jingtaichuan Electric Power Lifting and Irrigation Administration Jingdian Large Pumping Station.
Water Supply Project for Poverty Alleviation and Development of Ecological Immigrants in Central Gansu.
Jinghui large pumping station in Baiyin City, Gansu Province.
Water Lifting Project for Comprehensive Utilization of Water Resources in Ludila Hydropower Station, Binchuan County, Dali Prefecture, Yunnan Province.
South-to-North Water Diversion Water Transfer into Miyun Reservoir Regulation and Storage Project.
Inner Mongolia Ulan Teqian Banner Water Supply Project.
Zhongning County Hebei Urban and Rural Water Supply Project.
Shanghai Nanhui Collection Rainwater Pumping Station.
Yangshapao Pumping Station of Baicheng Yinnenbai Engineering Development Co., Ltd.
Reconstruction project of Changhe Water Plant supporting quality-based water supply of Haining City's extraterritorial water diversion project.
Jingmen Chengdong Water System is connected to Sutai Lake Pumping Station.
Siping Housing and Urban-Rural Development Bureau Reclaimed Water Reuse Project
Xiaochi Outflow Pumping Station in Huangmei County, Huanggang, Hubei.
Jialing River Water Source Project in Yuechi County, Sichuan.
Gansu Province Yintao Water Supply Phase II Qin'an County Urban and Rural Water Supply Good Ground Beam Project.
Liuzhou Jiaoyonggou River Improvement Project.
Renhuai City Gonghe Reservoir secondary and tertiary pumping station.
Tianjin Binhai New Area Central Bridge Yinhe Pumping Station.
Harbin Economic and Technological Development Zone (Hanan Industrial New City Water Supply Booster Pumping Station).
Zhejiang Water Conservancy and Hydropower Yaojiang River Upstream West Drainage Project.
An important protection project in the Wuxuan County Datangxia Water Conservancy Project Reservoir Area.
Yijingtan large-scale pumping station in Alashan League, Inner Mongolia Autonomous Region.





Paper industry

Shandong Sun Paper Co., Ltd.
Shandong Huatai Paper Co., Ltd.
Fuyu Chenming Paper Co., Ltd.
Nine Dragons Paper (Taicang) Co., Ltd.
Shanying International Holdings Co., Ltd.
Shandong Tianzhang Paper Co., Ltd.
Shandong Huamai Paper Co., Ltd.
Dongguan Junye Paper Co., Ltd.
Hubei Changjiang Huifeng Paper Co., Ltd.
Zhejiang Rongsheng Environmental Protection Paper Co., Ltd.
Shandong Hengyu Paper Co., Ltd.
Shanxi Qiangwei Paper Co., Ltd.
Shandong Tianhe Paper Co., Ltd.
Puyang Longfeng Paper Co., Ltd.
Jiangsu Yangzi Shengda Paper Technology Development Co., Ltd.
Shandong Ronghua Paper Co., Ltd.
Shandong Depak Paper Co., Ltd.
Jiangmen Star Paper Co., Ltd.
Shandong United Paper Co., Ltd.
Zhejiang Kaifeng Special Paper Co., Ltd.
Xinmi Hengfeng Paper Co., Ltd., Henan Province
Shandong Jianghe Paper Co., Ltd.
Vietnam Shun An Paper Co., Ltd.
Henan Longyuan Paper Co., Ltd.

Machinery manufacturing

Goertek Inc.
Weir Group Machinery Equipment (Shanghai) Co., Ltd.
Sinotruk Group Jinan Truck Co., Ltd.
Atlas Copco (Wuxi) Compressor Co., Ltd.
HUAYI Turbomachinery (Shandong) Co., Ltd.
FAW-Volkswagen New Technology Development Center.
HIGH-AIR Machinery (SHANGHAI) Co., Ltd.
Evergrande New Energy Vehicle (Guangdong) Co., Ltd.
CATL New Energy Technology Co., Ltd.
FS-ELLIOTT (SHANGHAI) Machinery Co., Ltd.
Yantai Jereh Compression Equipment Co., Ltd.
Linde Gases (Guangzhou, Suzhou) Co., Ltd.
Shaanxi LONGi Solar Photovoltaic Technology Co., Ltd.
Carrier Air Conditioning Sales Service (Shanghai) Co., Ltd.
Henghao Optoelectronics Technology (Kunshan) Co., Ltd.
Jiangsu Runyang Yueda Photovoltaic Technology Co., Ltd.
Xuzhou Xinjing Semiconductor Technology Co., Ltd.
Tianjin FAW Toyota Motor Co., Ltd.
AECC Chengdu Engine Co., Ltd.
Denier Energy Saving Technology (Shanghai) Co., Ltd.
Yantai Moon Group Co., Ltd.
Shanghai Kaiquan Pump (Group) Co.,Ltd.
Kaifeng Yellow River Air Separation Group Co., Ltd.
IHI-Sullair Compression Technology(Suzhou)Co.,Ltd.
Dengfu Machinery (Shanghai) Co., Ltd.

Follow Shanghai Renle
Professional Manufacturer for
Smart Grid • New Energy
Electric Drive

雷诺尔
Shanghai RENLE
Science&Technology Co., Ltd.

上海雷诺尔科技股份有限公司
Shanghai RENLE Science&Technology Co., Ltd.

Address: No.188 Building 1, Lane 3968, Chengbei Road, Jiading District, Shanghai, China
Zip code: 201807
Tel: +86-21-39532118，39538222
Fax: +86-21-39538129
http://www.renle.com
Email: sales@renle.com

January 2025